Reservoir body & valves LMJ (all)

Pos.	Part No.	Pcs.	Description	Shock type
4:0	01250-14	1	Comp. valve (pos. 4:1 - 4:16)	
4:1	00828-01	1	Screw	
4:2	00820-02	1	Adj. wheel	
4:3	01473-06	1	Circlip	
4:4	00338-79	1	O-ring	
4:5	01242-06	1	Needle	
4:6	00884-07	1	Ball	
4:7	00883-01	1	Spring	
4:8	01243-08	1	End piece	
4:9	00338-27	1	O-ring	
4:10	01247-01	1	Valve housing	
4:11	01246-01	1	Wave washer	
4:12	01245-01	1	Shims	
4:13	01244-05	1	Valve	
4:14	-	-	Shims	see spec. card
4:15	00641-01	1	Washer	
4:16	00430-05-	1	Nut	
4:17	00862-02	1	Reservoir top	
4:18	00338-24	1	O-ring	
4:19	00305-01	1	Piston	
4:20	00338-26	1	O-ring	
4:21	00340-01	1	Teflon seal	
4:22	00302-07	1	Reservoir body	
4:23	00338-04	1	O-ring	
4:24	00604-01	1	Rubber valve	
4:25	00161-03	1	End cap assy.	
4:26	00329-01	1	Circlip	
4:27	00338-59	1	O-ring	
4:28	01050-01	1	Screw	
4:29	00631-01	1	Banjo bolt	
4:30	00586-01	4	Washer	
4:31	00637-09	1	Hose 350 mm	(13,8”)
	00637-13	1	Hose 520 mm	(20,5”)
4:32	00382-07	1	Screw	
4:33	00338-79	1	O-ring	
4:34	00631-02	1	Banjo bolt	
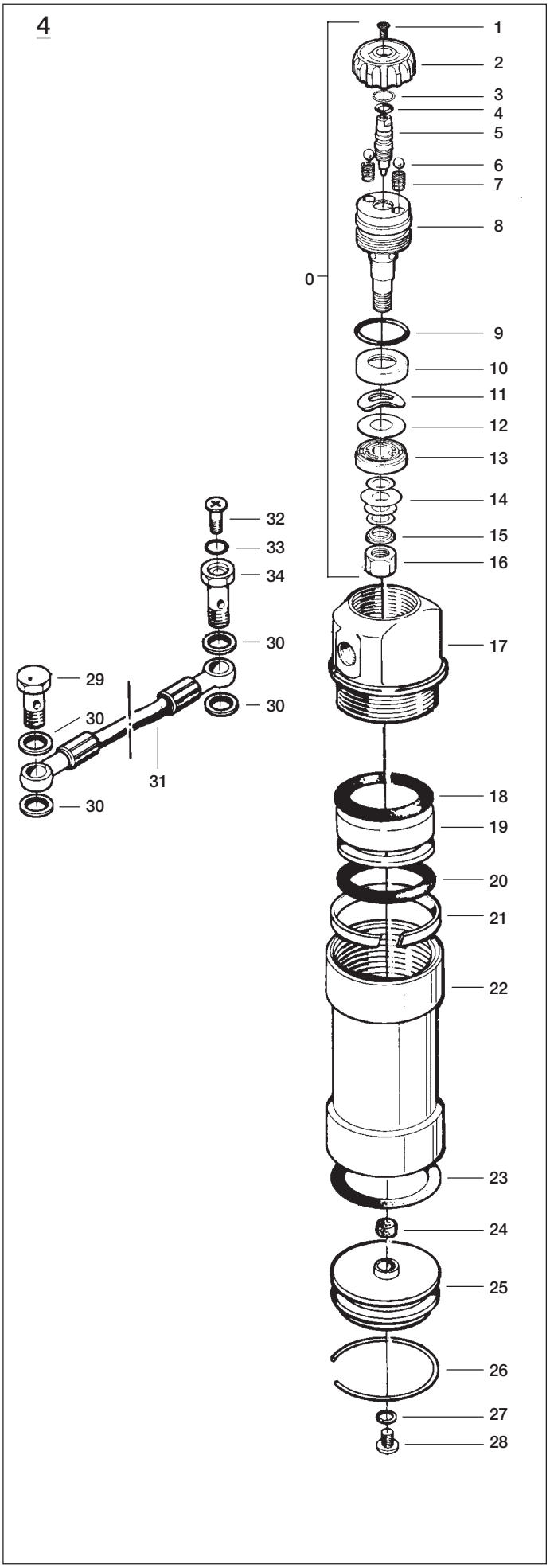
Notes